ASC ROOF DECK PROFILES

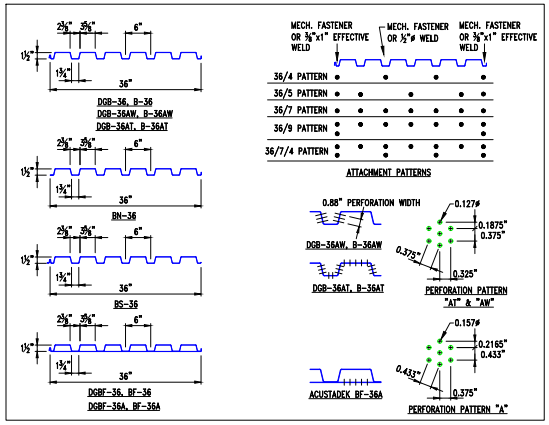

B PROFILES

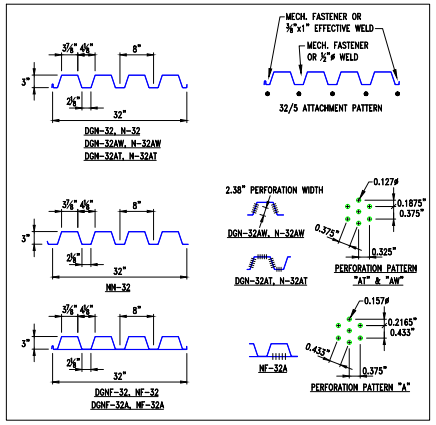

N PROFILES

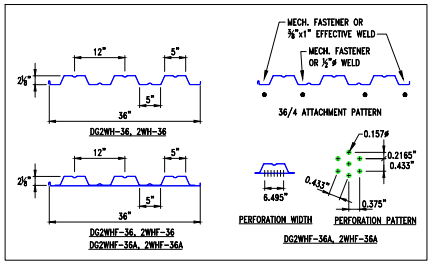

2WH PROFILES

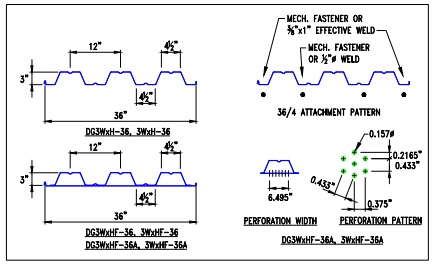

3WxH PROFILES

ASC FLOOR DECK PROFILES

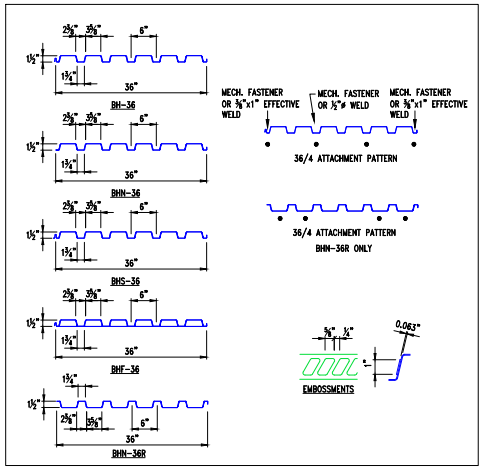

BH PROFILES

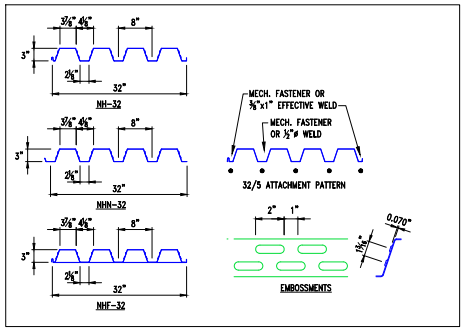

NH PROFILES

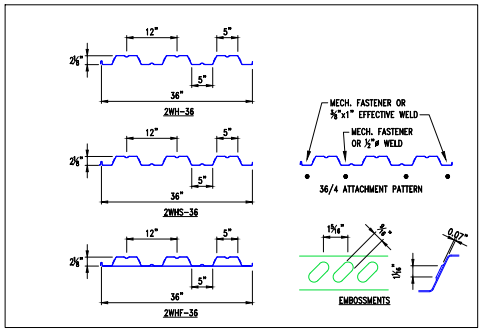

2WH PROFILES

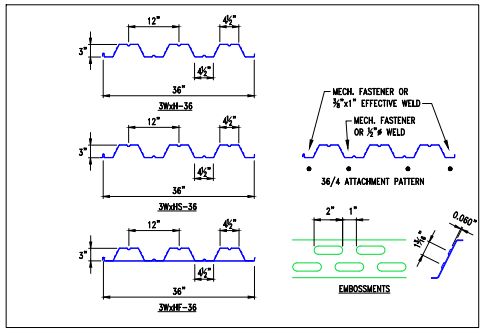

3WxH PROFILES

ASC NONCOMPOSITE DECK PROFILES

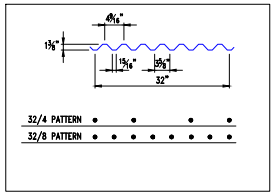

C1.4-32/CP-32 PROFILE

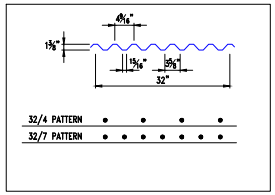

INVERTED C1.4-32/CP-32 PROFILE

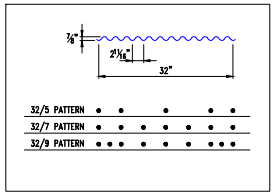

C0.9-32 PROFILE